Data Sheet

Article number: 20472270
Description: E+G Handwheel
GN 213-80-B 20

Measures

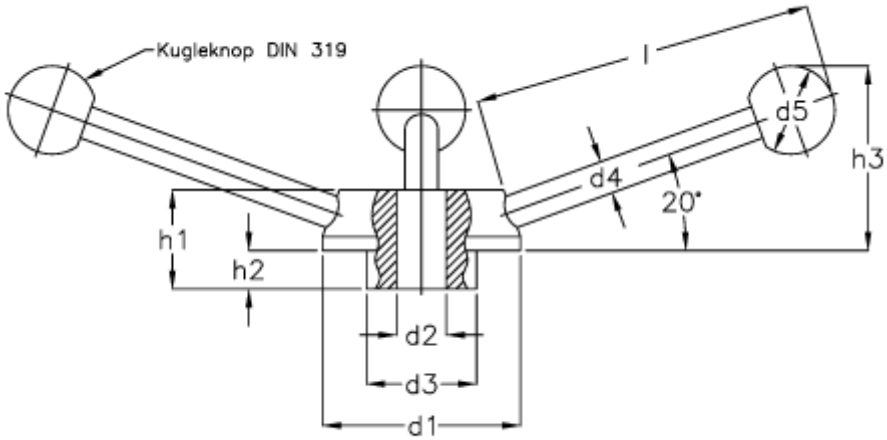

d1 = 80
d2 = B 20
d3 = 44
d4 = 14
d5 = 35
H1 = 40
H2 = 16
l = 138

Product drawings and brochures of any kind may contain errors for which Brd. Klee A/S cannot be liable.